400 Series Parts

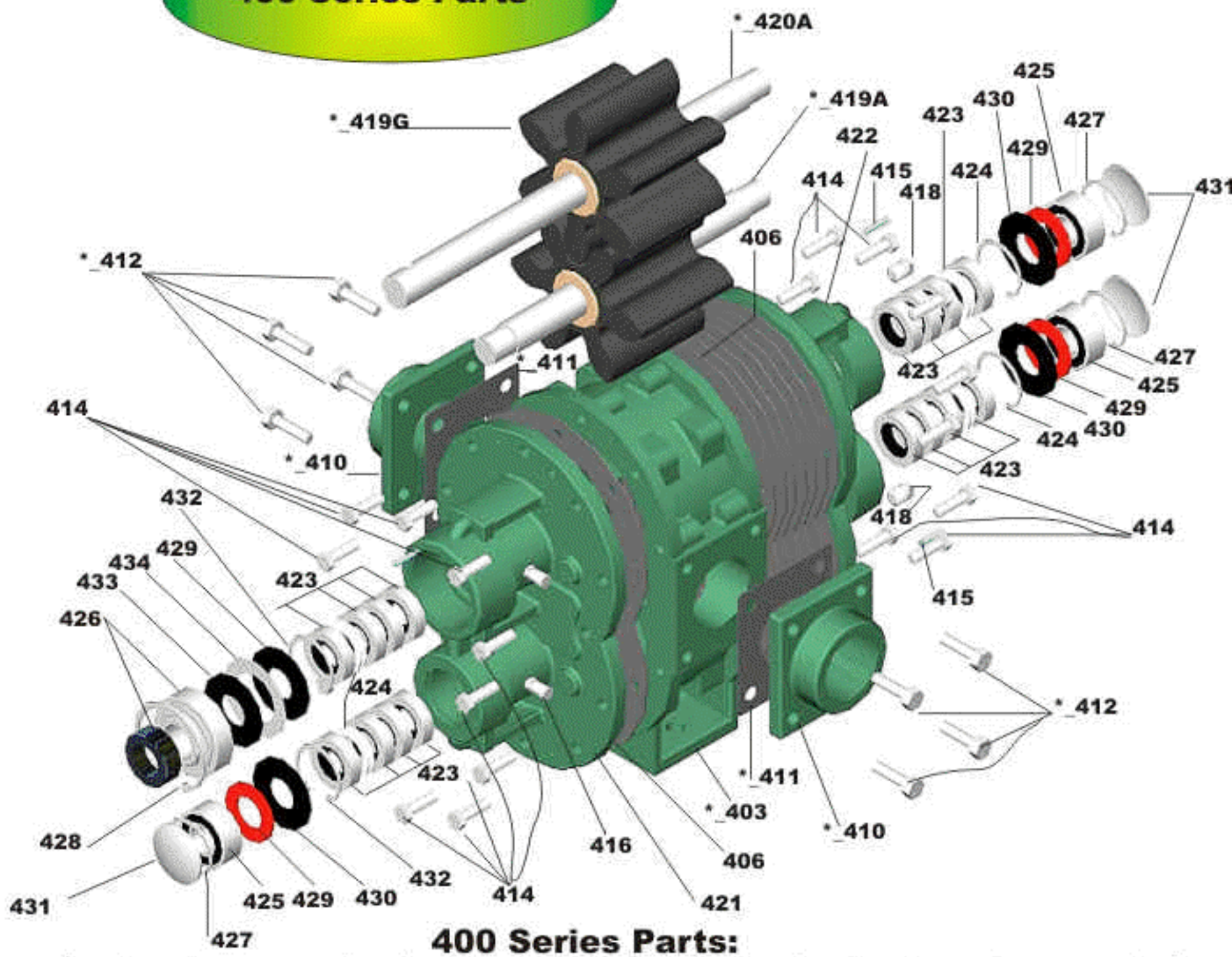

400 Series Parts:

No	Stock No.	Description	Qty	No	Stock No.	Description	Qty		No	Stock No.	Description	Qty
1	406	Gasket, Plate	8	11	426	Bearing, Large	1	*	20	-403	Case, Center	1
2	414	Bolt, End Plate	24	12	427	Ring, Lock 2" Bearing	3	*	21	-410	Flange, Adapter	2
3	415	Pin, Tape	4	13	428	Ring, Lock 3" Bearing	1	*	22	-411	Gasket, Flange	2
4	416	Fitting, Grease	4	14	429	Washer, Red Slinger	3	*	23	-412	Flange, Bolt	8
5	418	Plug, Drain	2	15	430	Washer, Blk Slinger	4	*	24	-419A	Shaft, Idler	1
6	421	Plate, Front OB	1	16	431	Plug, Expansion	3	*	25	-419K	Key, Gear	2
7	422	Plate, Back OB	1	17	432	Ring, Lock Seal	4	*	26	-419G	Gear, Buna-N	2
8	423	Seal, Shaft	16	18	433	Washer, Bearing Shield	1	*	27	-420A	Shaft, Drive	1
9	424	Ring, Lantern	4	19	434	Washer, Steel	1				** Optional	
10	425	Bearing, Small	3					**	28	422HP	Wear Plate	2

400 Series Options:

Stock No.	Description	Stock No.	Description		Stock No.	Description
421P	Plate, Ft POB	424T	Ring, Lantern Teflon POB	*	4 SS	Stainless Steel Shafts
422P	Plate, Back POB	24/34 EXT	Shaft, Extension	*	419 CG	Steel Gear
423G	Packing, Graphite	24/34 HP	Plate, Hard Wear	*	419 UG	Urethane Gear
423T	Packing, Teflon	24/34 RK	Repair Kit	*	419 VG	Viton Gear
424P	Nut, Packing POB	24/34 POB RK	Repair Kit	*	410A	Flange, Adapter Mounting
424S	Ring, Lantern Steel OB	24/34 POB	Gland, Packing	*	410 B	Flange, Adapter Alum/Bronze

*** Denotes 4 digit code number use pump size for first number**

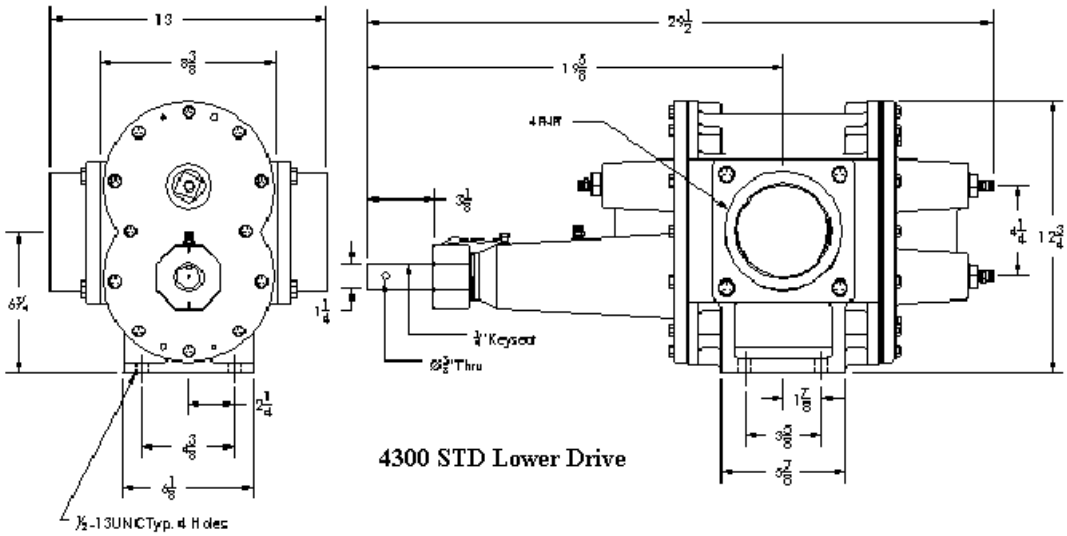

4300 STD Lower Drive

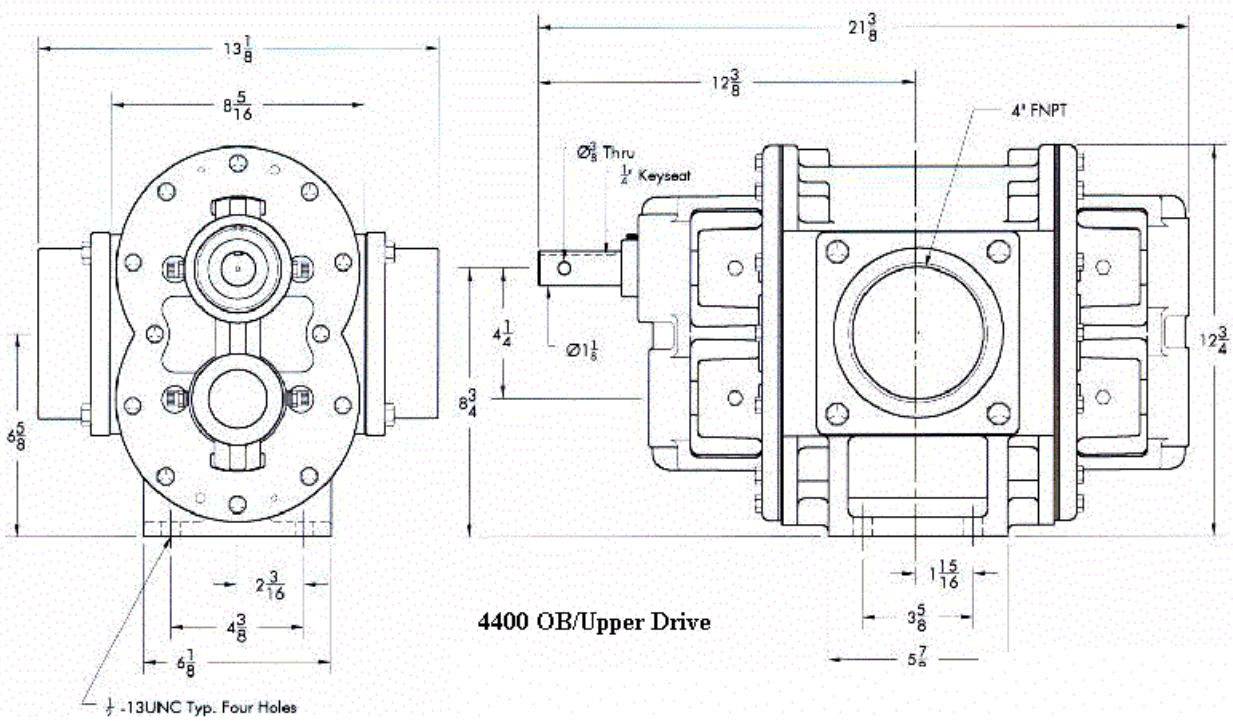

4400 OB/Upper Drive

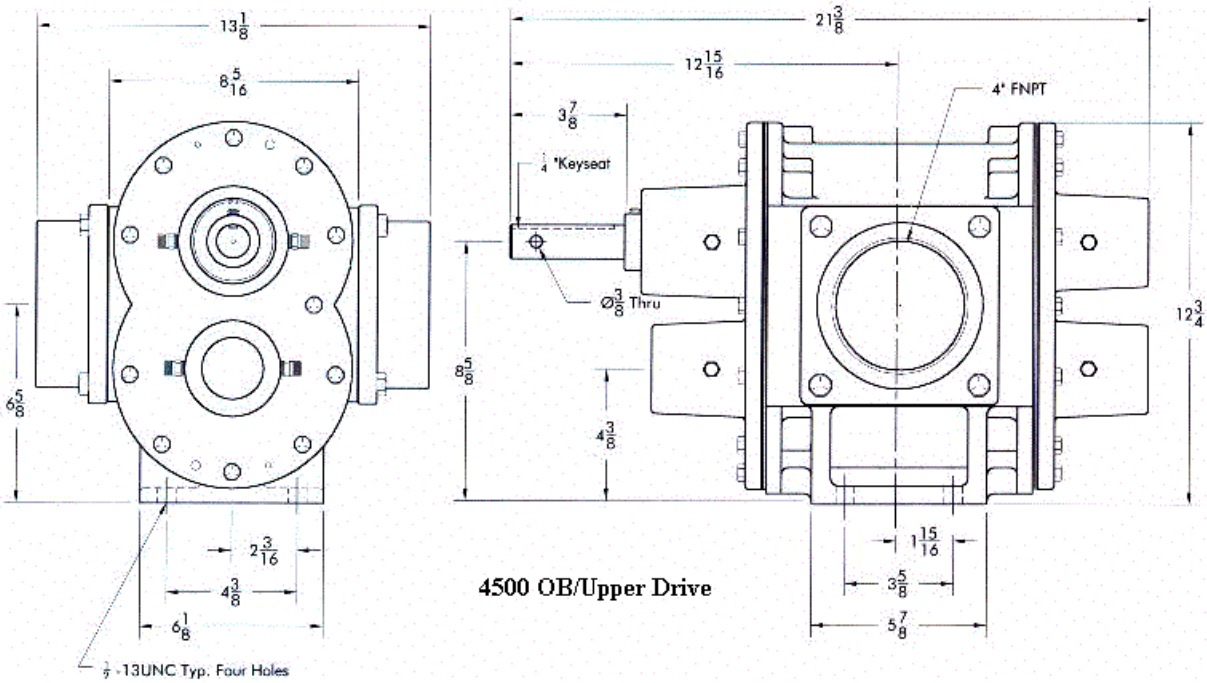

4500 OB/Upper Drive